SAINT Front Chainwheel

FC-M810-2
FC-M810-1

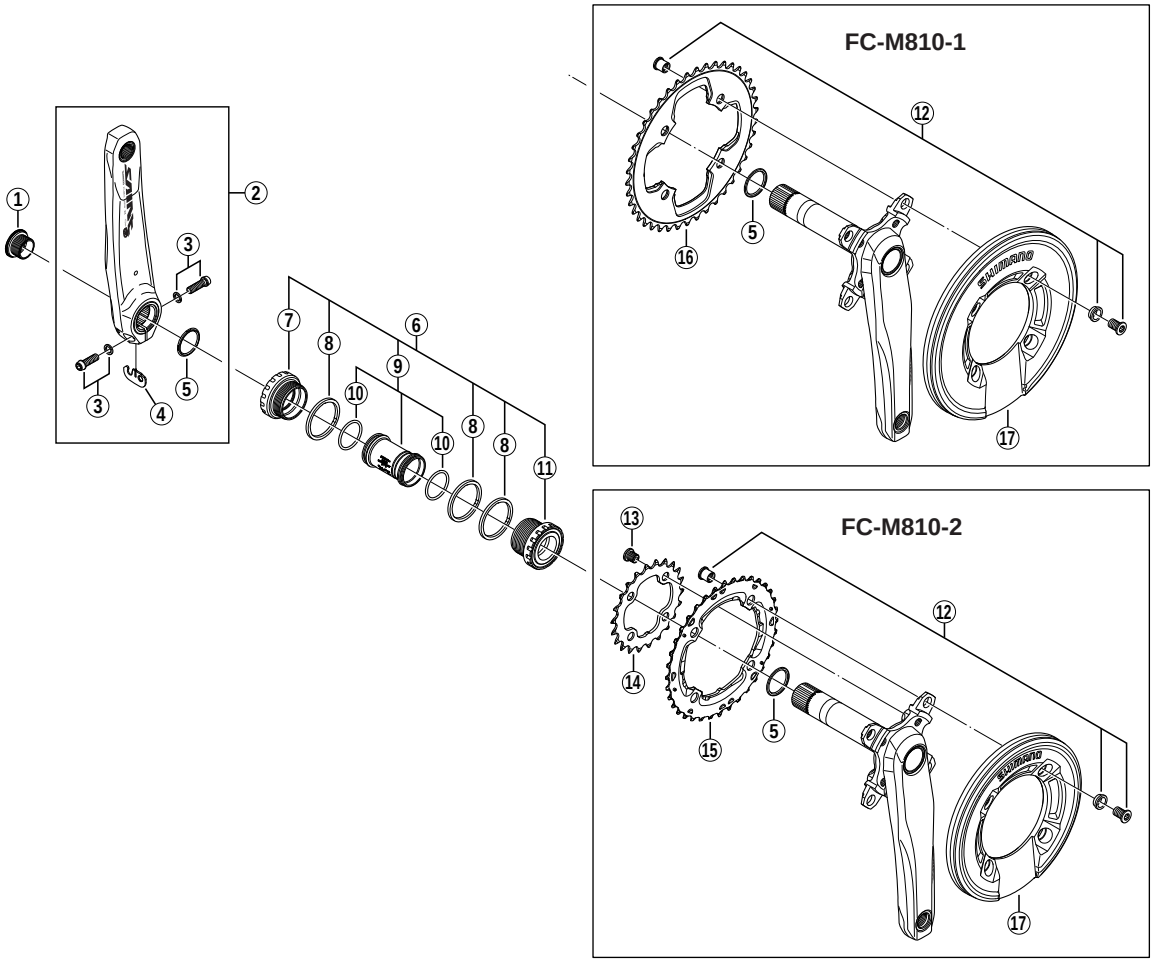

- **Bolt circle diameter: 104 mm...(For outer gear), 64 mm...(For inner gear)**

ITEM NO.	SHIMANO CODE NO.	DESCRIPTION	INTERCHANGE-ABILITY FC-M815	FC-M665
1	**Y-1KK13000**	Crank Arm Fixing Bolt	A	
2	**Y-1KK98010**	Left Hand Crank Arm 165 mm	A	
	Y-1KK98020	Left Hand Crank Arm 170 mm	A	
	Y-1KK98030	Left Hand Crank Arm 175 mm	A	
* 3	**Y-1F8 98010**	Clamp Bolt (M6 x 19) & Washer	A	B
4	**Y-1KK98040**	Plate	A	
5	**Y-1F3 16000**	Ring	A	A
6	**Y-1KK98050**	Adapter Unit		
7	**Y-1KK98060**	Left Hand Adapter (B.C.1.37" x 24T) English Thread	A	
8	**Y-1F8 13000**	Spacer (2.5 mm)	A	A
9	**Y-1KK98070**	Inner Cover & O-Ring		
10	**Y-1TF 21000**	O-Ring	A	
11	**Y-1KK98080**	Right Hand Adapter (B.C.1.37" x 24T) English Thread	A	
12	**Y-1KK98090**	Fixing Bolt Unit (M8 x 12 / 4 sets)	A	
13	**Y-1J1 98110**	Inner Gear Fixing Bolt (M8 x 8.5 / 4 pcs.)	A	A
14	**Y-1J1 22000**	Chainring 22T (Black)	A	
15	**Y-1KG98050**	Chainring 36T (Black)	A	
16	**Y-1KJ 34000**	Chainring 34T (Black)	A	
	Y-1KJ 36000	Chainring 36T (Black)	A	
	Y-1KJ 38000	Chainring 38T (Black)	A	
	Y-1KJ 40000	Chainring 40T (Black)	A	
	Y-1KJ 42000	Chainring 42T (Black)	A	
17	**Y-1KK18000**	Bash Guard M for 34T/36T	A	
	Y-1KJ 18000	Bash Guard L for 38T/40T/42T	A	

A: Same parts.
B: Parts are usable, but differ in materirals, appearance, finish, size, etc.
Absence of mark indicates non-interchangeability.

0808-2822A

Specifications are subject to change without notice.

SHIMANO