Thule ProRide
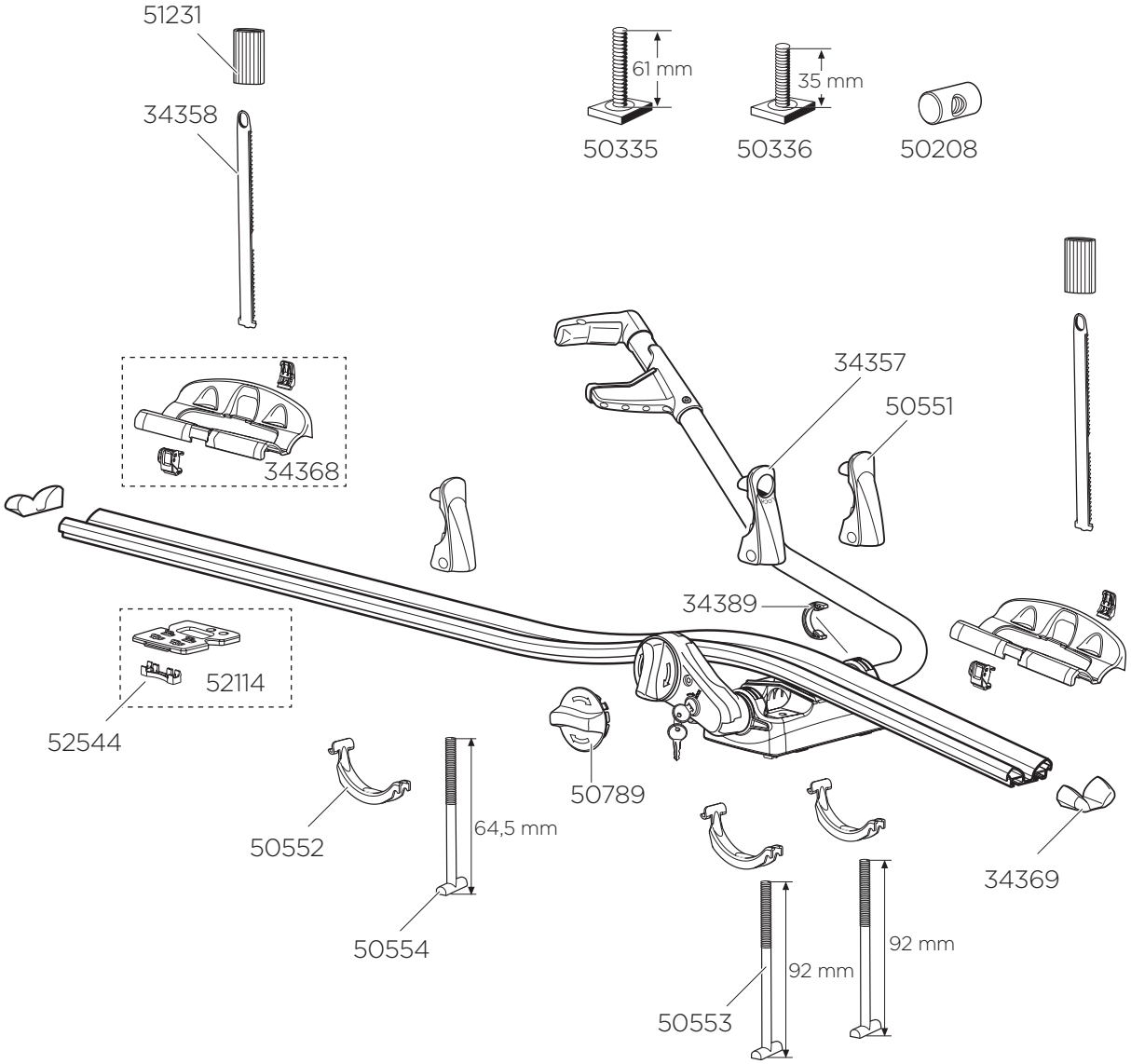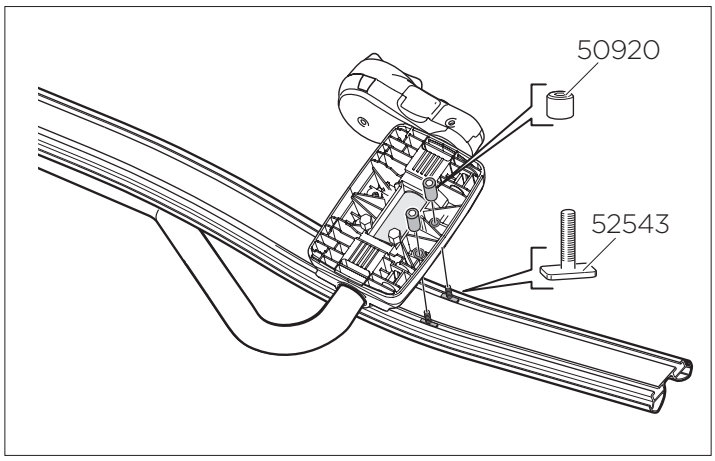
591